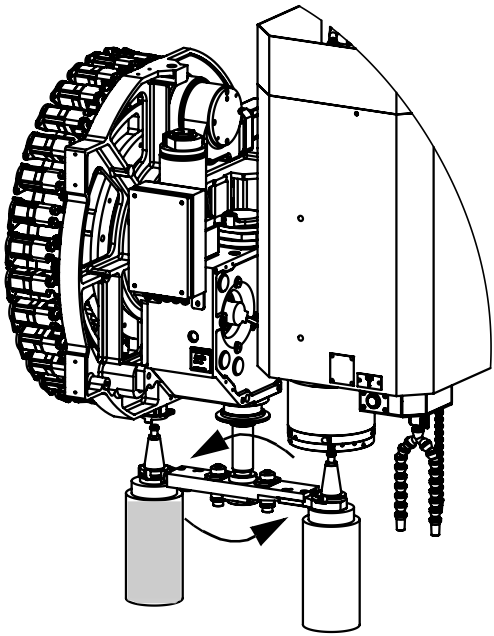

⑦ ATC arm rotates CCW direction by 180°.

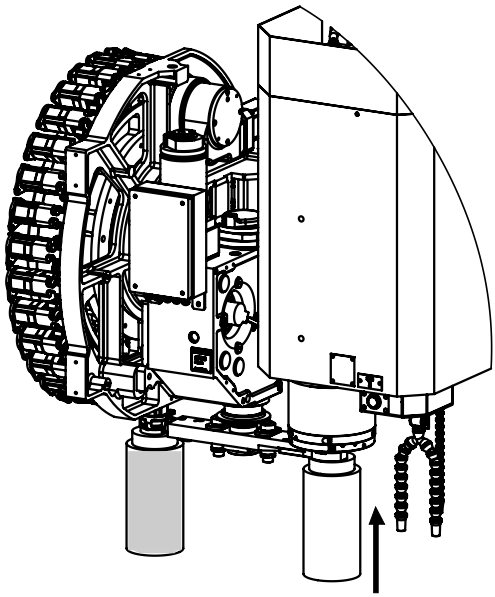

⑧ ATC arm moves up and spindle tool is clamped.